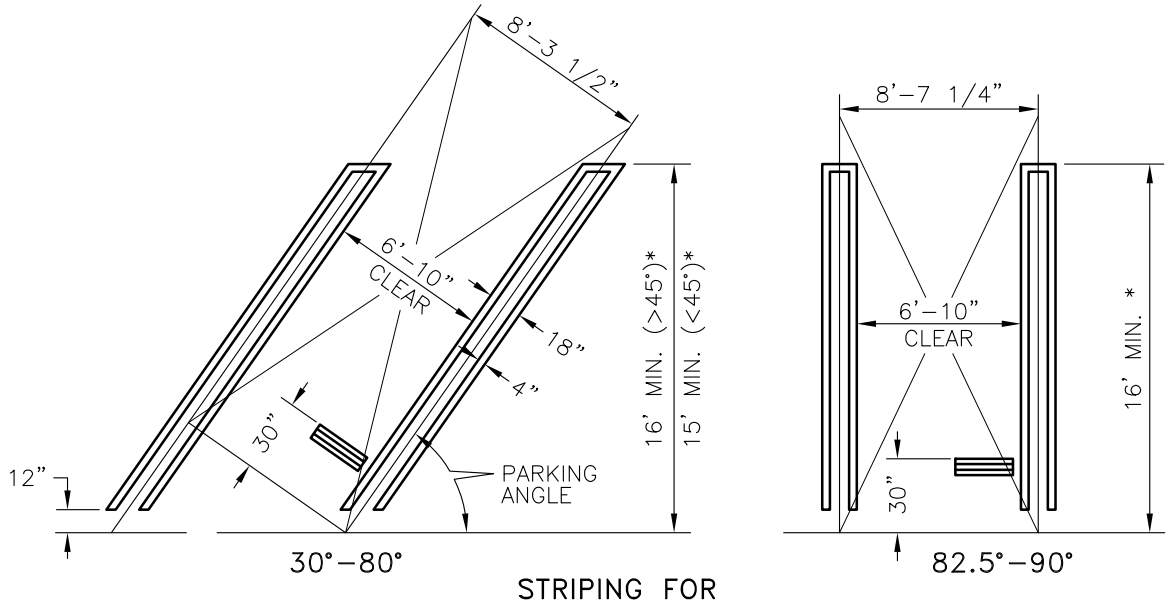

STRIPING FOR
AVERAGE PARKING STALLS

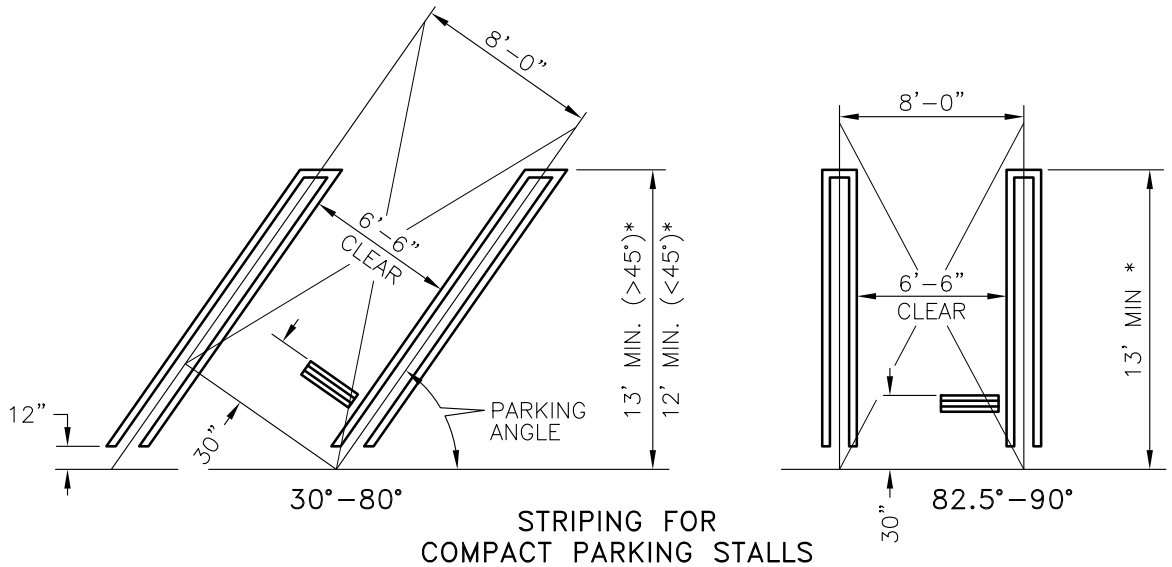

STRIPING FOR
COMPACT PARKING STALLS

GENERAL NOTES:

A. EACH COMPACT SPACE MUST BE LABELED AS SUCH ON THE PAVEMENT OR WHEELSTOP.

B. FOR RESIDENTIAL APPLICATIONS SINGLE-LINE MARKING IS APPROVED ALTERNATE.

C. WHEELSTOP SHALL BE LOCATED AS SHOWN, IF REQUIRED.

** THESE DIMENSIONS ARE TO BE USED ONLY FOR STRIPING AND NOT FOR PARKING LOT LAYOUT.*

REVISIONS	BY	APP	DATE
New border	*JDL*	*WAP*	*9-97*
Redrawn to CAD	*RMH*	*WAP*	*1-95*
Modified Stall Width	*MH*	*BL*	*10-09*
STANDARD CURRENT AS OF:	January 2010		

city of san luis obispo

PARKING LOT STRIPING

2250